Panasonic

Installation Guide

Network Camera

Model No. WV-SP105, WV-SP102
WV-SP105E, WV-SP102E

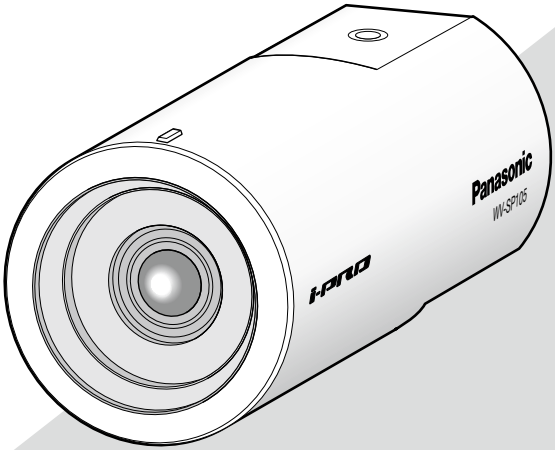

(This illustration represents WV-SP105.)

Before attempting to connect or operate this product, please read these instructions carefully and save this manual for future use.

The model number is abbreviated in some descriptions in this manual.

WARNING:

- Apparatus shall be connected to a mains socket outlet with a protective earthing connection.
- The mains plug or an appliance coupler shall remain readily operable.
- To prevent fire or electric shock hazard, do not expose this apparatus to rain or moisture.
- The apparatus should not be exposed to dripping or splashing and that no objects filled with liquids, such as vases, should be placed on the apparatus.
- All work related to the installation of this product should be made by qualified service personnel or system installers.
- For PERMANENTLY CONNECTED APPARATUS provided neither with an all-pole MAINS SWITCH nor an all-all pole circuit breaker, the installation shall be carried out in accordance with all applicable installation rules.
- The connections should comply with local electrical code.

CAUTION

RISK OF ELECTRIC SHOCK DO NOT OPEN

CAUTION: TO REDUCE THE RISK OF ELECTRIC SHOCK, DO NOT REMOVE COVER (OR BACK).
NO USER-SERVICEABLE PARTS INSIDE.
REFER SERVICING TO QUALIFIED SERVICE PERSONNEL.

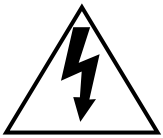

The lightning flash with arrowhead symbol, within an equilateral triangle, is intended to alert the user to the presence of uninsulated "dangerous voltage" within the product's enclosure that may be of sufficient magnitude to constitute a risk of electric shock to persons.

The exclamation point within an equilateral triangle is intended to alert the user to the presence of important operating and maintenance (servicing) instructions in the literature accompanying the appliance.

Power disconnection. Unit with or without ON-OFF switches have power supplied to the unit whenever the power cord is inserted into the power source; however, the unit is operational only when the ON-OFF switch is in the ON position. Unplug the power cord to disconnect the main power for all units.

For U.S. and Canada:
WV-SP105, WV-SP102
For Europe and other countries:
WV-SP105E, WV-SP102E

UL listed model No.:
WV-SP105, WV-SP102

For Canada

This Class A digital apparatus complies with Canadian ICES-003.

For U.S.A

NOTE: This equipment has been tested and found to comply with the limits for a Class A digital device, pursuant to Part 15 of the FCC Rules. These limits are designed to provide reasonable protection against harmful interference when the equipment is operated in a commercial environment. This equipment generates, uses, and can radiate radio frequency energy and, if not installed and used in accordance with the instruction manual, may cause harmful interference to radio communications.
Operation of this equipment in a residential area is likely to cause harmful interference in which case the user will be required to correct the interference at his own expense.

FCC Caution: To assure continued compliance, (example - use only shielded interface cables when connecting to computer or peripheral devices). Any changes or modifications not expressly approved by the party responsible for compliance could void the user's authority to operate this equipment.

For U.S.A

The serial number of this product may be found on the surface of the unit.
You should note the model number and serial number of this unit in the space provided and retain this book as a permanent record of your purchase to aid identification in the event of theft.

Model No. _____

Serial No. _____

We declare under our sole responsibility that the product to which this declaration relates is in conformity with the standards or other normative documents following the provisions of Directives 2006/95/EC and 2004/108/EC.

Wir erklären in alleiniger Verantwortung, daß das Produkt, auf das sich diese Erklärung bezieht, mit den folgenden Normen oder normativen Dokumenten übereinstimmt. Gemäß den Bestimmungen der Richtlinie 2006/95/EC und 2004/108/EC.

Nous déclarons sous notre propre responsabilité que le produit auquel se réfère la présente déclaration est conforme aux normes spécifiées ou à tout autre document normatif conformément aux dispositions des directives 2006/95/CE et 2004/108/CE.

Nosotros declaramos bajo nuestra única responsabilidad que el producto a que hace referencia esta declaración está conforme con las normas u otros documentos normativos siguiendo las estipulaciones de las directivas 2006/95/CE y 2004/108/CE.

Noi dichiariamo sotto nostra esclusiva responsabilità che il prodotto a cui si riferisce la presente dichiarazione risulta conforme ai seguenti standard o altri documenti normativi conformi alle disposizioni delle direttive 2006/95/CE e 2004/108/CE.

Wij verklaren als enige aansprakelijke, dat het product waarop deze verklaring betrekking heeft, voldoet aan de volgende normen of andere normatieve documenten, overeenkomstig de bepalingen van Richtlijnen 2006/95/EC en 2004/108/EC.

Vi erklærer os eneansvarlige for, at dette produkt, som denne deklaration omhandler, er i overensstemmelse med standarder eller andre normative dokumenter i følge bestemmelserne i direktivene 2006/95/EC og 2004/108/EC.

Vi deklarerar härmed vårt fulla ansvar för att den produkt till vilken denna deklaration hänvisar är i överensstämmelse med de standarder eller andra normativa dokument som framställs i direktiv nr 2006/95/EC och 2004/108/EC.

Ilmoitamme yksinomaisella vastuullamme, että tuote, jota tämä ilmoitus koskee, noudattaa seuraavia standardeja tai muita ohjeellisia asiakirjoja, jotka noudattavat direktiivien 2006/95/EC ja 2004/108/EC säädöksiä.

Vi erklærer oss alene ansvarlige for at produktet som denne erklæringen gjelder for, er i overensstemmelse med følgende normer eller andre normgivende dokumenter som følger bestemmelsene i direktivene 2006/95/EC og 2004/108/EC.

Contents

Important safety instructions 5
Limitation of liability 6
Disclaimer of warranty 6
Preface 7
Main functions 7
About the user manuals 8
System requirements for a PC 8
Trademarks and registered trademarks 9
About copyright and license 9
Network security 10
Precautions 10
Precautions for Installation 13
Major operating controls 15
Installation 16
Connection 23
Configure the network settings 26
Troubleshooting 28
Specifications 29
Standard accessories 32
Optional accessories 32

Important safety instructions

1) Read these instructions.

2) Keep these instructions.

3) Heed all warnings.

4) Follow all instructions.

5) Do not use this apparatus near water.

6) Clean only with dry cloth.

7) Do not block any ventilation openings. Install in accordance with the manufacturer's instructions.

8) Do not install near any heat sources such as radiators, heat registers, stoves, or other apparatus (including amplifiers) that produce heat.

9) Do not defeat the safety purpose of the polarized or grounding-type plug. A polarized plug has two blades with one wider than the other. A grounding type plug has two blades and a third grounding prong. The wide blade or the third prong are provided for your safety. If the provided plug does not fit into your outlet, consult an electrician for replacement of the obsolete outlet.

10) Protect the power cord from being walked on or pinched particularly at plugs, convenience receptacles, and the point where they exit from the apparatus.

11) Only use attachments/accessories specified by the manufacturer.

12) Use only with the cart, stand, tripod, bracket, or table specified by the manufacturer, or sold with the apparatus. When a cart is used, use caution when moving the cart/apparatus combination to avoid injury from tip-over.

13) Unplug this apparatus during lightning storms or when unused for long periods of time.

14) Refer all servicing to qualified service personnel. Servicing is required when the apparatus has been damaged in any way, such as power-supply cord or plug is damaged, liquid has been spilled or objects have fallen into the apparatus, the apparatus has been exposed to rain or moisture, does not operate normally, or has been dropped.

Limitation of liability

THIS PUBLICATION IS PROVIDED "AS IS" WITHOUT WARRANTY OF ANY KIND, EITHER EXPRESS OR IMPLIED, INCLUDING BUT NOT LIMITED TO, THE IMPLIED WARRANTIES OF MERCHANTABILITY, FITNESS FOR ANY PARTICULAR PURPOSE, OR NON-INFRINGEMENT OF THE THIRD PARTY'S RIGHT.
THIS PUBLICATION COULD INCLUDE TECHNICAL INACCURACIES OR TYPOGRAPHICAL ERRORS. CHANGES ARE ADDED TO THE INFORMATION HEREIN, AT ANY TIME, FOR THE IMPROVEMENTS OF THIS PUBLICATION AND/OR THE CORRESPONDING PRODUCT (S).

Disclaimer of warranty

IN NO EVENT SHALL Panasonic System Networks Co., Ltd. BE LIABLE TO ANY PARTY OR ANY PERSON, EXCEPT FOR REPLACEMENT OR REASONABLE MAINTENANCE OF THE PRODUCT, FOR THE CASES, INCLUDING BUT NOT LIMITED TO BELOW:

(1) ANY DAMAGE AND LOSS, INCLUDING WITHOUT LIMITATION, DIRECT OR INDIRECT, SPECIAL, CONSEQUENTIAL OR EXEMPLARY, ARISING OUT OF OR RELATING TO THE PRODUCT;
(2) PERSONAL INJURY OR ANY DAMAGE CAUSED BY INAPPROPRIATE USE OR NEGLIGENT OPERATION OF THE USER;
(3) UNAUTHORIZED DISASSEMBLE, REPAIR OR MODIFICATION OF THE PRODUCT BY THE USER;
(4) INCONVENIENCE OR ANY LOSS ARISING WHEN IMAGES ARE NOT DISPLAYED, DUE TO ANY REASON OR CAUSE INCLUDING ANY FAILURE OR PROBLEM OF THE PRODUCT;
(5) ANY PROBLEM, CONSEQUENTIAL INCONVENIENCE, OR LOSS OR DAMAGE, ARISING OUT OF THE SYSTEM COMBINED BY THE DEVICES OF THIRD PARTY;
(6) ANY CLAIM OR ACTION FOR DAMAGES, BROUGHT BY ANY PERSON OR ORGANIZATION BEING A PHOTOGENIC SUBJECT, DUE TO VIOLATION OF PRIVACY WITH THE RESULT OF THAT SURVEILLANCE-CAMERA'S PICTURE, INCLUDING SAVED DATA, FOR SOME REASON, BECOMES PUBLIC OR IS USED FOR ANY PURPOSE;
(7) LOSS OF REGISTERED DATA CAUSED BY ANY FAILURE.

Preface

The network cameras WV-SP105, WV-SP102, WV-SP105E and WV-SP102E are designed to operate using a PC on a network (10BASE-T/100BASE-TX).
By connecting to a network (LAN) or the Internet, images from the camera can be monitored on a PC via a network.

WV-SP105

- Maximum image capture size: 1280 x 960 (Aspect ratio 4:3), 1280 x 720 (Aspect ratio 16:9)
- Extra zoom

WV-SP102

- Maximum image capture size: 640 x 480 (Aspect ratio 4:3), 640 x 360 (Aspect ratio 16:9)

Note:

- It is necessary to configure the network settings of the PC and its network environment to monitor images from the camera on the PC. It is also necessary to install a web browser on the PC.

Main functions

Triple encoding: JPEG and two types of H.264
The outputs of JPEG and two H.264 streams can be simultaneously provided.

Power over Ethernet function
When connecting with a PoE (Power over Ethernet) device, power will be supplied by simply connecting a LAN cable. (IEEE802.3af compliant)

Adaptive black stretch function
Black crushing in the darker parts of objects, which have various illumination intensities, is corrected to make an image more viewable.

Extra zoom (WV-SP105 only)
Among approx. 1.3 megapixel image capture area of the MOS image sensor, the central part of approx. 0.3 megapixels is extracted for shooting. That enables the shooting with a higher zooming effect. When the image capture size under "VGA" is applied, the zoom factor can be adjusted up to 2x.

About the user manuals

There are 2 sets of operating instructions for the WV-SP105, WV-SP102 (NTSC model) and WV-SP105E, WV-SP102E (PAL model) as follows.

- Installation Guide: Explains how to install and connect devices.
- Operating Instructions (PDF): Explains how to perform the settings and how to operate this camera.

Adobe® Reader® is required to read these operating instructions (PDF) on the provided CD-ROM.
When the Adobe® Reader® is not installed on the PC, download the latest Adobe® Reader® from the Adobe web site and install it.
"WV-SP105" or "SP105" shown in the instructions and illustrations used in these operating instructions indicate the WV-SP105 and WV-SP105E.
"WV-SP102" or "SP102" shown in the instructions and illustrations used in these operating instructions indicate the WV-SP102 and WV-SP102E.

The screens used in these operating instructions show the cases of NTSC models.

System requirements for a PC

CPU:	Intel® Core™ 2 Duo 2.4 GHz or faster recommended
Memory:	512 MB or more (A minimum of 1 GB memory is required when using Microsoft® Windows® 7 or Microsoft® Windows Vista®.)
Network interface:	10BASE-T/100BASE-TX 1 port
Monitor:	Image capture size: 1024 x 768 pixels or more Color: 24-bit True color or better
OS:	Microsoft® Windows® 7 Professional (64-bit) Microsoft® Windows® 7 Professional (32-bit) Microsoft® Windows Vista® Business SP1 (32-bit) Microsoft® Windows® XP Professional SP3
Web browser:	Windows® Internet Explorer® 8.0 (Microsoft® Windows® 7 Professional (32-bit/64-bit)) Windows® Internet Explorer® 7.0 (Microsoft® Windows Vista® Business SP1 (32-bit)) Microsoft® Internet Explorer® 6.0 SP3 (Microsoft® Windows® XP Professional SP3)
Others:	CD-ROM drive (It is necessary to read the operating instructions and use the software on the provided CD-ROM.) DirectX® 9.0c or later Adobe® Reader® (It is necessary to read the operating instructions on the provided CD-ROM.)

Important:

- When using a PC that does not meet the above requirements, displaying of images may become slower or the web browser may become inoperable.
- Microsoft® Windows® XP Professional 64-bit Edition is not supported.
- When using IPv6 for communication, use Microsoft® Windows® 7 or Microsoft® Windows Vista®.

Note:

- Refer to "Notes on Windows Vista® / Windows® 7" (PDF) for further information about system requirements for a PC and precautions when using Microsoft® Windows® 7 or Microsoft® Windows Vista®.

Trademarks and registered trademarks

- Microsoft, Windows, Windows Vista, Internet Explorer, ActiveX, and DirectX are either registered trademarks or trademarks of Microsoft Corporation in the United States and/or other countries.
- Microsoft product screen shot(s) reprinted with permission from Microsoft Corporation.
- Intel and Intel Core are trademarks or registered trademarks of Intel Corporation in the United States and other countries.
- Adobe, the Adobe logo, and Reader are either registered trademarks or trademarks of Adobe Systems Incorporated in the United States and/or other countries.
- All other trademarks identified herein are the property of their respective owners.

About copyright and license

Distributing, copying, disassembling, reverse compiling, reverse engineering, and also exporting in violation of export laws of the software provided with this unit are expressly prohibited.

Network security

As you will use this unit connected to a network, your attention is called to the following security risks.

① Leakage or theft of information through this unit
② Use of this unit for illegal operations by persons with malicious intent
③ Interference with or stoppage of this unit by persons with malicious intent

It is your responsibility to take precautions such as those described below to protect yourself against the above network security risks.

- Use this unit in a network secured by a firewall, etc.
- If this unit is connected to a network that includes PCs, make sure that the system is not infected by computer viruses or other malicious entities (using a regularly updated anti-virus program, anti-spyware program, etc.).
- Protect your network against unauthorized access by restricting users to those who log in with an authorized user name and password.
- Apply measures such as user authentication to protect your network against leakage or theft of information, including image data, authentication information (user names and passwords), alarm mail information, FTP server information and DDNS server information.
- After the unit is accessed by the administrator, make sure to close the browser.
- Change the administrator password periodically.
- Do not install the camera in locations where the camera or the cables can be destroyed or damaged by persons with malicious intent.

Precautions

Refer installation work to the dealer.
Installation work requires technique and experiences. Failure to observe this may cause fire, electric shock, injury, or damage to this product.
Be sure to consult the dealer.

Stop the operation immediately when something is wrong with this product.
When smoke goes up from this product or the smell of smoke comes from this product, stop the operation immediately and contact your dealer.
Turn the power off immediately and contact qualified service personnel for service.

Do not attempt to disassemble or modify this product.
Failure to observe this may cause fire or electric shock.
Consult the dealer for the repair or inspections.

Do not insert any foreign objects.
This could permanently damage this product.
Turn the power off immediately and contact qualified service personnel for service.

Select an installation area that can support the total weight.
Selecting an inappropriate installation surface may cause this product to fall down or topple over, resulting in injury.
Installation work shall be started after sufficient reinforcement.

Periodic inspections shall be conducted.
Rust on the metal parts or screws may cause a fall of this product resulting in injury or accidents.
Consult the dealer for the inspections.

Do not use this product in an inflammable atmosphere.
Failure to observe this may cause an explosion resulting in injury.

Avoid installing this product in the locations where salt damage occurs or corrosive gas is produced.
Otherwise, the mounting portions will deteriorate and accidents such as a fall of the product may occur.

The measures of protection against a fall of this product shall be taken.
Failure to observe this may cause a drop resulting in injury.
Be sure to install the safety wire.

The exclusively designed mount bracket shall be used.
Failure to observe this may cause a drop resulting in injury or accidents.
Use the exclusively designed mount bracket for installation.

Do not install this product in locations subject to vibration.
Loosening of mounting screws or bolts may cause a fall of the product resulting in injury.

Install this product in a location high enough to avoid people and objects from bumping the product.
Failure to observe this may cause a drop resulting in injury or accidents.

Do not strike or give a strong shock to this product.
Failure to observe this may cause fire or injury.

Turn the power off when do wiring of this product.
Failure to observe this may cause electric shock. In addition, short circuit or wrong wiring may cause fire.

Do not rub the edges of metal parts with your hand.
Failure to observe this may cause injury.

Turn the power off when cleaning this product.
Failure to observe this may cause injury.

[Precautions for use]

This product is designed to be used indoors. The product is not operable outdoors.

This product has no power switch.
When turning off the power, turn off a circuit breaker.

To keep on using with stable performance
Do not use this product in hot and humid conditions for a long time. Failure to observe this causes component degradation resulting in life shortening of the product.
Do not expose this product to direct heat sources such as a heater.

Handle this product with care.
Do not drop this product, nor apply shock or vibration to the product. Failure to observe this may cause trouble.

About the PC monitor
When displaying the same image on the monitor for a long time, the monitor may be damaged. It is recommended to use a screen-saver.

When an error is detected, this product will restart automatically.
This product will be inoperable for around 2 minutes after the restart just as when the power is turned on.

Cleaning this product body

Be sure to turn off the power before cleaning.
Do not use strong abrasive detergent when cleaning this product. Otherwise, it may cause discoloration.
When using a chemical cloth for cleaning, read the caution provided with the chemical cloth product.

When the dirt is hard to remove, use a mild detergent and wipe gently.

When the dirt is hard to remove, use a mild detergent and wipe gently. Then, wipe off the remaining detergent with a dry cloth.

Transmission interval

Image transmission interval may become slow depending on the network environment, PC performance, shooting subject, access number, etc.

Code label

The code labels (accessory) are required at inquiry for trouble. Use caution not to lose these labels. It is recommended to paste one of the labels onto the CD-ROM case.

Discoloration on the color filter of the MOS image sensor

When continuously shooting a bright light source such as a spotlight, the color filter of the MOS image sensor may have deteriorated and it may cause discoloration. Even when changing the fixed shooting direction after continuously shooting a spotlight for a certain period, the discoloration may remain.

AVC Patent Portfolio License

THIS PRODUCT IS LICENSED UNDER THE AVC PATENT PORTFOLIO LICENSE FOR THE PERSONAL USE OF A CONSUMER OR OTHER USES IN WHICH IT DOES NOT RECEIVE REMUNERATION TO (i) ENCODE VIDEO IN COMPLIANCE WITH THE AVC STANDARD ("AVC VIDEO") AND/OR (ii) DECODE AVC VIDEO THAT WAS ENCODED BY A CONSUMER ENGAGED IN A PERSONAL ACTIVITY AND/OR WAS OBTAINED FROM A VIDEO PROVIDER LICENSED TO PROVIDE AVC VIDEO. NO LICENSE IS GRANTED OR SHALL BE IMPLIED FOR ANY OTHER USE. ADDITIONAL INFORMATION MAY BE OBTAINED FROM MPEG LA, L.L.C.
SEE HTTP://WWW.MPEGLA.COM

Flickering

Due to the influence of lighting, flickering may sometimes happen. In this case, select "Indoor scene" for "Light control mode". Select "Indoor scene(50Hz)" or "Indoor scene(60Hz)" in accordance with the power supply frequency in your locality. Refer to the Operating Instructions (PDF) for further information about the setting.
Under extremely strong lighting, flickering may happen even when "Indoor scene" is selected for "Light control mode".
When the brightness (illuminance) level on the screen is set to a relatively low level with the [Brightness] buttons, flickering may frequently happen. In such cases, either of the following can reduce flickering.

- Moderate the illumination intensities of objects by changing the camera direction.
- Set the brightness (illuminance) level on the screen to a brighter level with the [Brightness] buttons.

White-out on images caused by the effect of light control mode

When "Indoor scene" is selected for "Light control mode", the tone of the brighter parts on the screen may be deteriorated than the case when "ELC" is selected.

Color blurring on detailed drawing patterns

When there are detailed drawing patterns on images, color blurring may happen over these parts.

White dot noise

When the brightness levels of objects are too low, white dot noise may appear on the screen.

Precautions for Installation

No responsibility will be taken by our company with respect to consequeces resulting from the use, damage or both of the camera.

This product is designed to be used indoors.
The product is not operable outdoors.
Do not expose the product to direct sunlight for hours and do not install the product near a heater or an air conditioner. Otherwise, it may cause deformation, discoloration and malfunction. Keep the product away from water and moisture.

Installation place
Do not place this product in the following places:

- Locations where it may get wet from rain or water splash
- Locations where a chemical agent is used such as a swimming pool
- Locations subject to humidity, dust, steam and oil smoke
- Locations in a specific environment where a solvent or a flammable atmosphere exists
- Locations where a radiation, an X-ray, a strong radio wave or a strong magnetic field is generated
- Locations where corrosive gas is produced, locations where it may be damaged by briny air such as seashores
- Locations where the temperature is not within 0 °C to +40 °C {32 °F to 104 °F}.
- Locations subject to vibrations (This product is not designed for on-vehicle use.)
- Locations subject to condensation as the result of severe changes in temperature

Be sure to remove this product if it is not in use.

Before installation

- The locally procured camera mount bracket shall be used to mount this product.
- When the product and camera mount bracket are mounted on a ceiling or a wall, use the screws described on page 17. The screws to be used are not provided. Prepare the screws according to the material, structure, strength and other factors of the mounting area and the total weight of objects to be mounted.
- Ensure that the mounting surface, anchor and screws are sufficiently strong.
- Do not mount the product on a plaster board or a wooden section because they are too weak. If this product is unavoidably mounted on such a section, the section shall be sufficiently reinforced.

Screw tightening

- The screws and bolts must be tightened with an appropriate tightening torque according to the material and strength of the installation area.
- Do not use an impact driver. Use of an impact driver may damage the screws or cause tightening excessively.
- When a screw is tightened, make the screw at a right angle to the surface. After tightening the screws or bolts, perform visual check to ensure tightening is enough and there is no backlash.

Fall prevention measures
When the external safety wire is connected, select a connection point resulting in that nothing will hit people after the mount bracket is damaged. The wire length shall be adjusted to remove slack.

Angle adjustment
Be sure to loosen the screw of the camera mount bracket when the camera angle is adjusted. If the camera angle is changed when the screw is tight, excessive force is applied to the camera mount bracket and this product, and accordingly they may be damaged. Be sure to tighten the fixing piece securely after camera angle adjustment.

Radio disturbance
When this product is used near TV/radio antenna, strong electric field or magnetic field (near a motor, a transformer or a power line), images may be distorted and noise sound may be produced.

PoE (Power over Ethernet)
Use a PoE hub/device that is compliant with IEEE802.3af standard.

Router
When connecting this product to the Internet, use a broadband router with the port forwarding function (NAT, IP masquerade).
Refer to the Operating Instructions (PDF) for further information about the port forwarding function.

Time & date setting
It is necessary to set the time & date before putting this product into operation. Refer to the Operating Instructions (PDF) on the provided CD-ROM for descriptions of how to perform the settings.

Major operating controls

<Top view>

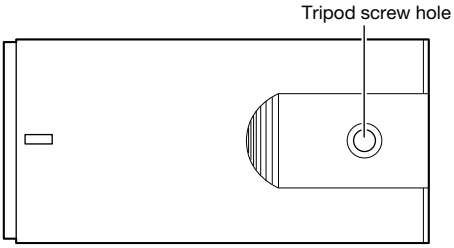

<Side view>

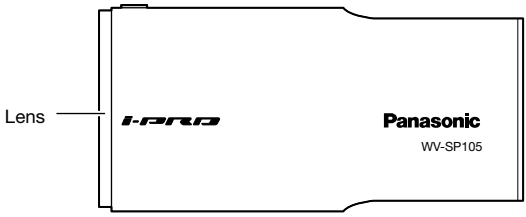

<Bottom view>

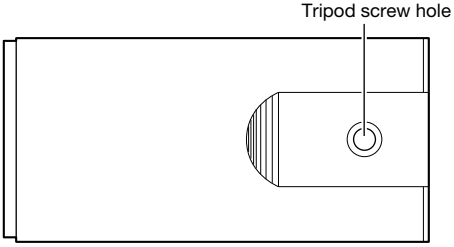

<Rear view>

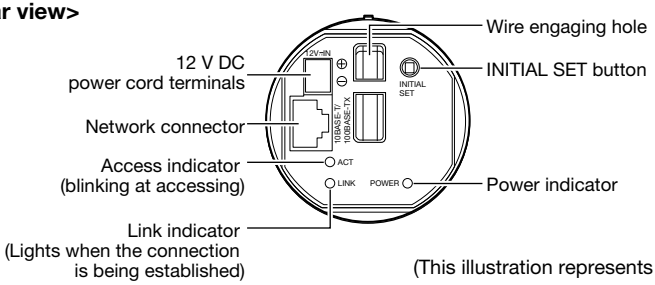

(This illustration represents WV-SP105.)

About the [INITIAL SET] button

After turning off the power of the camera, turn on the power of the camera while holding down this button, and wait for around 5 seconds or more without releasing this button. Wait around 2 minutes after releasing the button. The camera will start up and the settings including the network settings will be initialized. Before initializing the settings, it is recommended to write down the settings in advance.

Installation

Connect the safety wire

If an installation area has sufficient strength (☞ page 17), secure the provided safety wire to the installation area.
If not, procure another wire that can substitute for the safety wire (accessory).
The following is an example of safety wire connection.

Important:

- Be sure to install the safety wire. Ask your dealer for installation.
- Take care so that the camera does not roll over. Do not remove the camera cover film until the installation is completed.
- When the rear sheet* comes off, fit the sheet into the rear panel of the camera. (The rear sheet is not stuck to the camera.)

Install on ceiling

Camera mount bracket (locally procured) and the safety wire (accessory) will be used for installation.

1 Bend the ring part and the ring neck of the safety wire (accessory).

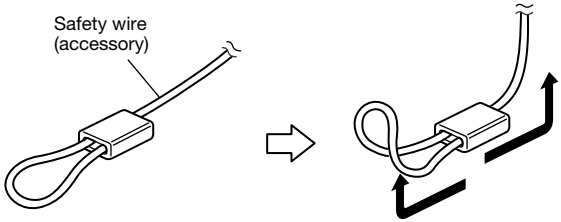

2 Engage the safety wire (accessory) with the wire engaging hole.

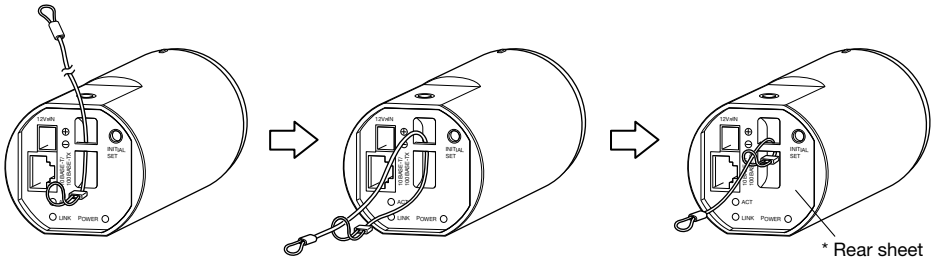

① Pass the ring part of the safety wire (accessory) through the wire engaging hole.

② Pass the other end of the safety wire through the ring part of the safety wire.

Camera mounting

The camera will be mounted on the camera mount bracket (locally procured). After the angular field of view is determined, the safety wire will be secured.

Important:

- The installation area shall be strong enough to hold the camera and camera mount bracket (locally procured).
- The camera mount bracket (locally procured) shall be mounted on the foundation part of the construction or a part with adequate strength.
- To prevent the mounting strength from becoming lower, do not use wooden screws to secure the camera mount bracket (locally procured).
- The camera cannot be mounted on a camera housing or a pan/tilt head.

1 Secure the camera mount bracket (locally procured) to an installation position, and mount the camera on the camera mount bracket. Prepare mounting screws according to the material of the area where the camera mount bracket (locally procured) is to be installed. The installation method may be different depending on the material of the area where the bracket is to be installed.

When installing on steel: Fix with bolts and nuts (M6 or M8).
When installing on concrete: Fix with anchor bolts (M6 or M8)

The dimensions and conditions required for the screw of camera mount bracket is described as follows:

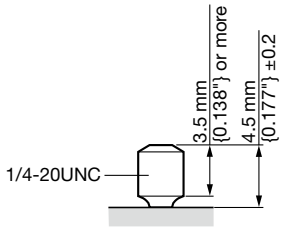

If the screw of camera mount bracket is too long, adjust the screw length using a spacer so as to meet the dimensions and conditions described in the illustration.

Important:

- When the camera mount bracket (locally procured) is mounted on a wall, be sure to observe the mounting height described on the illustration.

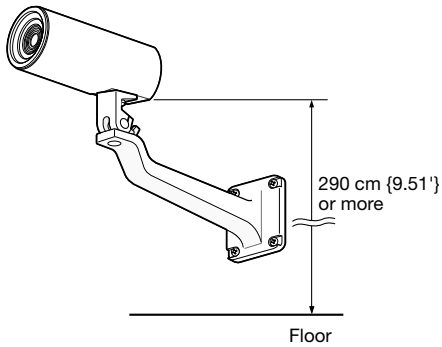

Attach the angle adjustment cover to the camera

Important:

- Angle adjustment cover (accessory) is intended for the tentative adjustment of angular field of view. Perform the final adjustment while viewing the images actually on a monitor.
- The angle adjustment cover is dedicated to this product.

1 Build up the angle adjustment cover (accessory).

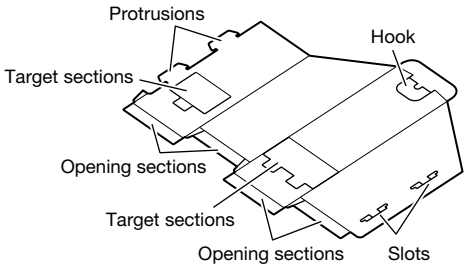

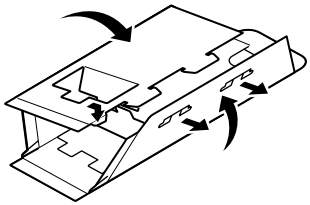

① Insert the protrusions into the slots.

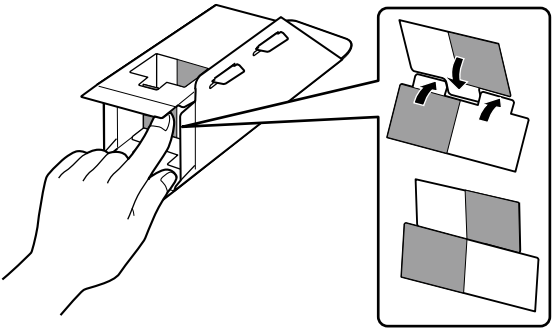

② Fold the target sections inward.

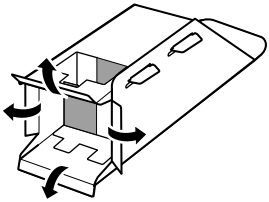

③ Fold the opening sections outward at a right angle.

2 Attach the cover to the camera.

When attaching the angle adjustment cover to the camera, use a vacant tripod screw hole to prevent the cover from dropping and to determine the position to check the angular field of view. Place the sticker (accessory) over the tripod screw hole after checking the angular field of view.

<For mounting on ceiling>

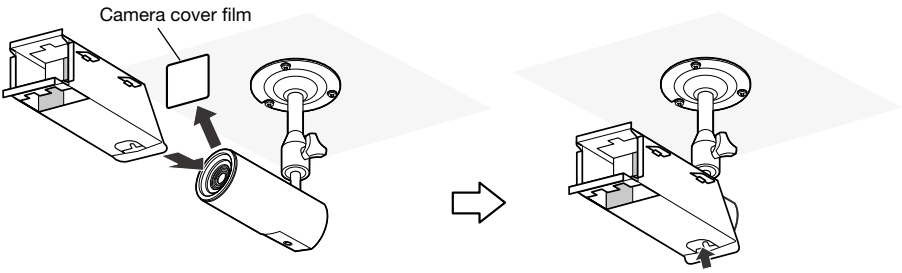

Remove the camera cover film.
Make sure that the hook is situated at the bottom, and place the angle adjustment cover over the camera.

Fold the hook inward, and put the hook on the tripod screw hold for fixation.

<For mounting on wall>

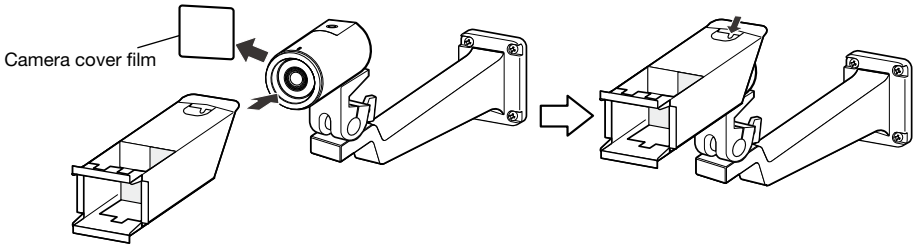

Remove the camera cover film.
Make sure that the hook is situated at the top, and place the angle adjustment cover over the camera.

Fold the hook inward, and put the hook on the tripod screw hole for fixation.

Adjust the angular field of view

Adjusts the angle of the camera. The angle can be adjusted by moving the camera vertically or horizontally.

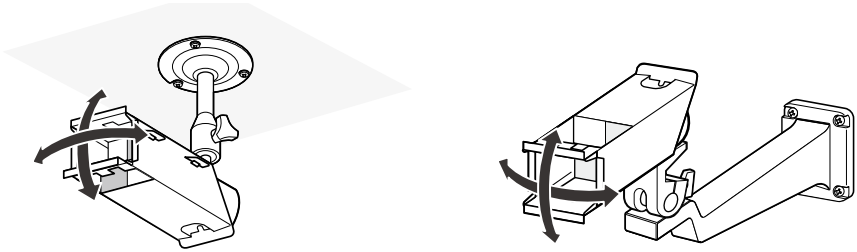

How to check the angular field of view

1 Check the shooting range with the angle adjustment cover attached to the camera.

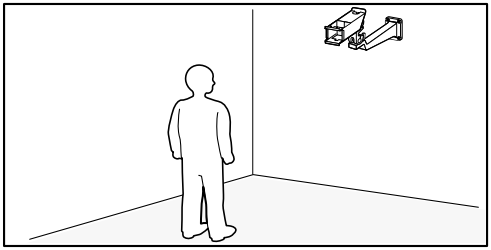

2 You can see the camera adjustment cover as illustrated when you look toward the camera from a desired shooting area.

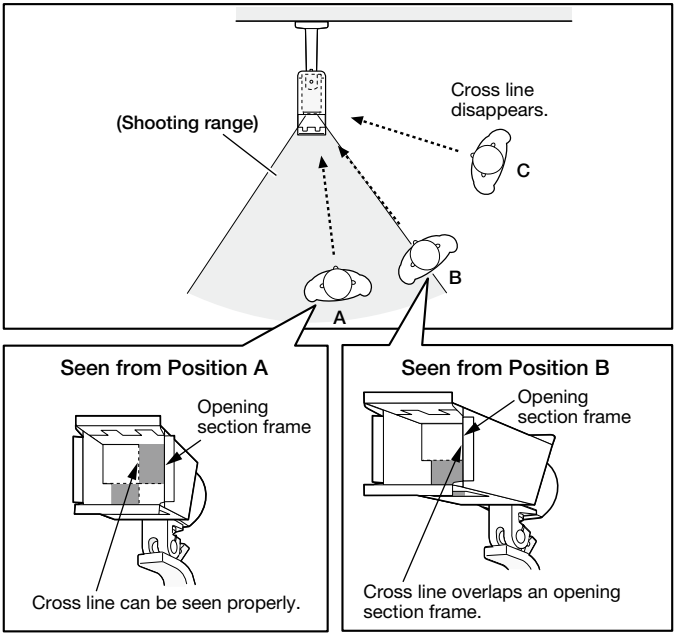

*** The angular field of view can be checked the same way from the left, top and bottom.**

Remove the angle adjustment cover

After determining the installation angle of the camera, remove the angle adjustment cover. Make sure the camera is secured to the camera mount bracket, and place the sticker (accessory) over the tripod screw hole on which the hook of the angle adjustment cover was put.

Secure the safety wire on the ceiling or wall

Secure the safety wire to the foundation part of the construction or a part with adequate strength (minimum pull-out strength 196 N {44.06 lbf}).
Prepare the fixing screw according to the material of the area where the safety wire is to be fixed.
For mounting on ceiling, use the safety wire (accessory), washer (accessory) and spring washer (accessory). For mounting on wall, use a safety wire kit (locally procured).

Important:

- The safety wire shall be adjusted to remove slack.
- Be sure to install the safety wire to prevent a fall of the camera resulting in injury or accidents in case the camera comes off.
- To prevent the mounting strength from becoming lower, do not use wooden screws to secure the safety wire.

<For mounting on ceiling>

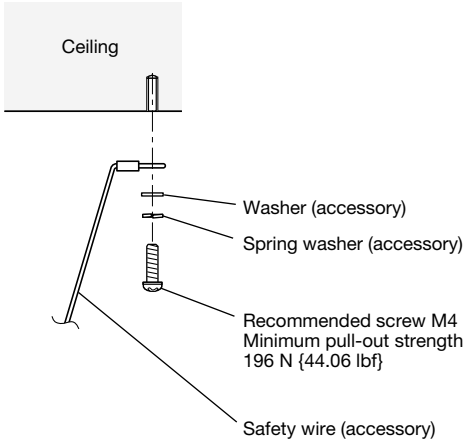

<Mounting sample>

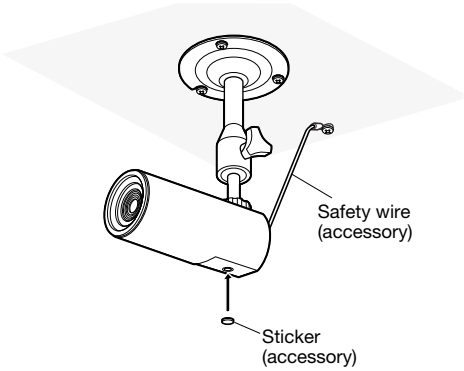

<For mounting on wall>

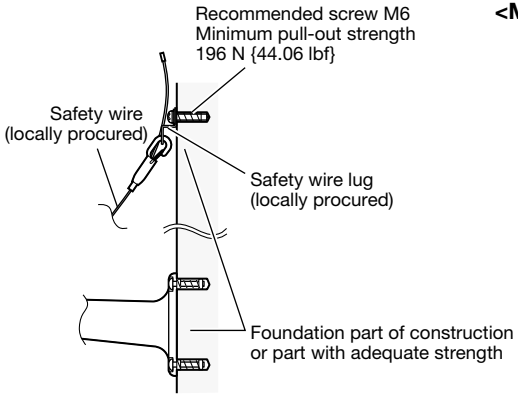

<Mounting sample>

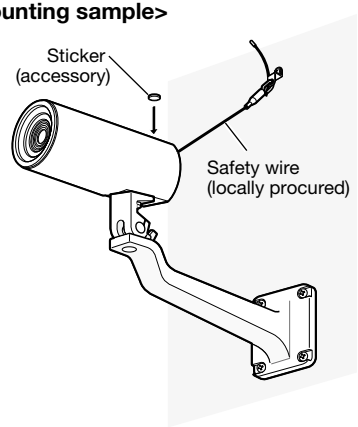

Connection

Caution:
- FOR UL LISTED MODEL(S), ONLY CONNECT 12 V DC CLASS 2 POWER SUPPLY.

Before starting the connection, turn off the power of this camera and the devices to be connected. Check and prepare the required devices and cables for connection.

1 Connect a LAN cable (category 5 or better, straight, STP*) to the network connector on the rear of the camera.
* PAL models only

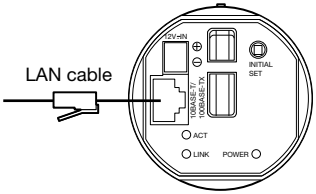

(This illustration represents WV-SP105.)

2 Connect the power cord.

Important:
- The 12 V DC power supply shall be insulated from the commercial AC power.

● When using 12 V DC power supply*

① Loosen the screw of the power cord plug (accessory).
② Connect the cable of the 12 V DC power supply* to the power cord plug.
Strip 3 mm - 7 mm {1/8" to 9/32"} from the end of the wire, and twist the stripped part of the wire sufficiently to avoid short circuit.
Specification of cable (wire): 16 AWG - 28 AWG, Single core, twisted
- Check whether the stripped part of the wire is not exposed and is securely connected.

③ Tighten the screw of the power cord plug (accessory).
④ Connect the power cord plug (accessory) to the 12 V DC power supply terminal on the rear of the camera.

* FOR UL LISED MODEL(S), ONLY CONNECT 12 V DC CLASS 2 POWER SUPPLY.

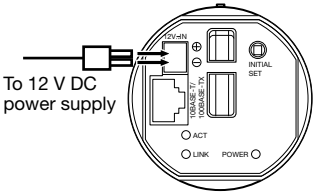

(This illustration represents WV-SP105.)

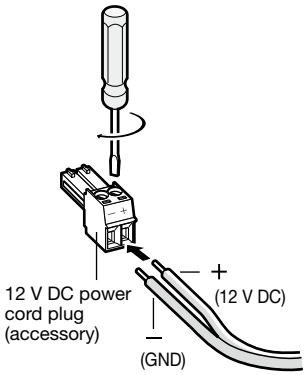

Important:

- Be sure to use the power cord plug (accessory) provided with this product.
- Be sure to fully insert the power cord plug (accessory) into the 12 V DC power supply terminal. Otherwise, it may damage the camera or cause malfunction.
- Mount the camera so that excessive force is not applied to the power cord.
- Be sure to use an AC adaptor compliant with the Specifications regarding power source and power consumption (☞ p.29).

● When using PoE (IEEE802.3af compliant)

Connect a LAN cable (category 5 or better, straight, STP*) between a PoE device (such as a hub) and the network connector of the camera.
* PAL models only

Important:

- Use all 4 pairs (8 pins) of the LAN cable.
- The maximum cable length is 100 m {328'}.
- Make sure that the PoE device in use is compliant with IEEE802.3af standard.
- When connecting both the 12 V DC power supply and the PoE device for power supply, 12 V DC power supply will be used for power supply.
- When the LAN cable is disconnected once, reconnect the cable after around 2 seconds. When the cable is quickly reconnected, the power may not be supplied from the PoE device.

Connection example when connecting to a network using a PoE hub

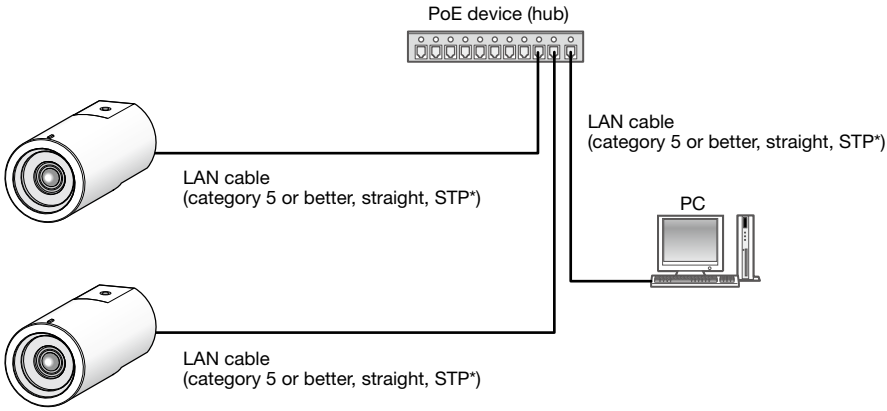

<Required cable>

LAN cable (category 5 or better, straight, STP*)

* PAL models only

Important:

- The camera is to be connected only to PoE networks without routing to the outside plant when using PoE.
- Use a switching hub or a router which is compliant with 10BASE-T/100BASE-TX.
- Power supply is required for each network camera. When using a PoE device (hub), 12 V DC power supply is unnecessary.

Configure the network settings

Install the software

Before installing the software, refer to the readme file on the provided CD-ROM first.

Software included on the provided CD-ROM

- Panasonic IP setting software
  Configure the network settings of the camera. Refer to the following for further information.
- Viewer Software "Network Camera View 4S"
  It is necessary to install the viewer software "Network Camera View 4S" to display images on a PC. Install the viewer software by double-clicking the "nwcv4Ssetup.exe" icon on the provided CD-ROM.

Configure the network settings of the camera using the Panasonic IP setting software

It is possible to perform the network settings of the camera using the IP setup software on the provided CD-ROM.
When using multiple cameras, it is necessary to configure the network settings of each camera independently.
If the Panasonic IP setting software does not work, configure the network settings of the camera and the PC individually on the "Network" page of the setup menu. Refer to the Operating Instructions (PDF) for further information.

Important:

- When using Microsoft Windows Vista, the "Windows Security Alert" window may be displayed when starting the IP setup software. In this case, disable "User Account Control" from the control panel.
- For the security enhancement, the MAC address/IP address of the camera to be configured will not be displayed when around 20 minutes have passed after turning on the power of the camera. (When "Easy IP Setup accommodate period" is set to "20min")
- Panasonic IP setting software is inoperable in other subnets via the same router.
- This camera cannot be displayed or set with an older version of the IP setup software (version 2.xx).

1 Start the Panasonic IP setting software.

2 Click the [IP setting] button after selecting the MAC address/IP address of the camera to be configured.

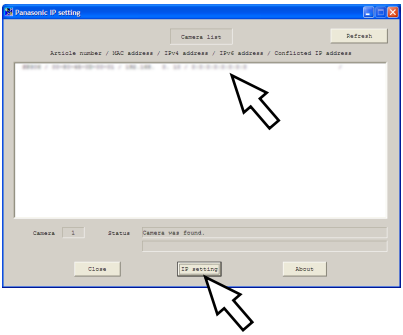

Note:

- When using a DHCP server, the IP address assigned to the camera can be displayed by clicking the [Refresh] button of the IP setting software.
- When a duplicate IP address is used, the corresponding MAC address/IP address will be displayed shaded.

3 Complete each network setup item and click the [Apply] button.

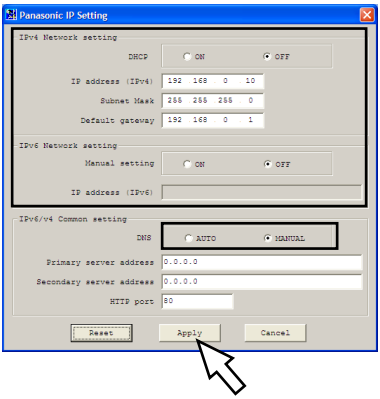

Note:

- When using a DHCP server, it is possible to set "DNS" to "AUTO".

Important:

- It may take for around 2 minutes to complete to upload the settings to the camera after clicking the [Apply] button. The settings may be invalidated when the 12 V DC power supply is cut or when the LAN cable is disconnected before completing the upload. In this case, perform the settings again.
- When using a firewall (including software), allow access to all UDP ports.

Troubleshooting

Before asking for repairs, check the symptoms with the following table.
Contact your dealer if a problem cannot be solved even after checking and trying the solution in the table or a problem is not described below.

Symptom	Cause/solution	Reference pages
Power is not turned on.	**When using DC power supply** • Is 12 V DC power supply connect to the power supply terminal? → Check whether the connection is appropriately established. • Is the AC adaptor in use compliant with the Specifications? → Check the Specifications regarding AC adaptor. **When using a PoE device for power supply** • Are the PoE device and the network connector on the rear of the camera connected using a LAN cable (4-pair)? → Check whether the connection is appropriately established. • Depending on the PoE device, the power supply will stop when the demanded power exceeds its total power limit for all PoE ports. → Refer to the operating instructions of the PoE device in use.	23, 24

Specifications

● Basic

Power source:	12 V DC, PoE (IEEE802.3af compliant)
Power consumption:	WV-SP105 12 V DC*: 200 mA, PoE: 2.8 W (Class 2 device) WV-SP102 12 V DC*: 140 mA, PoE: 2.0 W (Class 2 device) * FOR UL LISTED MODEL(S), ONLY CONNECT 12 V DC CLASS 2 POWER SUPPLY.
Ambient operating temperature:	0 °C to +40 °C {32 F° to 104 F°}
Ambient operating humidity:	Less than 90 % (no condensation)
Dimensions:	55 mm (W) x 55 mm (H) x 122 mm (D) {2-5/32 inches (W) x 2-5/32 inches (H) x 4-13/16 inches (D)} (excluding connectors/terminals)
Mass:	WV-SP105: Approx. 180 g {0.40 lbs} WV-SP102: Approx. 170 g {0.38 lbs}
Finish:	Fine silver (501)

● Camera

Image sensor:	WV-SP105: 1/3 type MOS image sensor WV-SP102: 1/5 type MOS image sensor
Effective pixels:	WV-SP105: Approx. 1.3 megapixels WV-SP102: Approx. 0.32 megapixels
Scanning area:	WV-SP105: 4.80 mm (H) × 3.60 mm (V) {3/16 inches (H) × 5/32 inches (V)} WV-SP102: 2.69 mm (H) × 2.02 mm (V) {7/64 inches (H) × 3/32 inches (V)}
Scanning system:	Progressive
Minimum illumination:	WV-SP105: Color: 0.8 lx {0.08 footcandle} (F2.2, Auto slow shutter: Off (1/30 s), AGC: High) 0.05 lx {0.005 footcandle} (F2.2, Auto slow shutter: max. 16/30 s, AGC: High)* BW: 0.4 lx {0.04 footcandle} (F2.2, Auto slow shutter: Off (1/30 s), AGC: High) 0.03 lx {0.003 footcandle} (F2.2, Auto slow shutter: max. 16/30 s, AGC: High)* * Converted value WV-SP102: Color: 2.0 lx {0.2 footcandle} (F2.0, Auto slow shutter: Off (1/30 s), AGC: High) 0.3 lx {0.03 footcandle} (F2.0, Auto slow shutter: max. 8/30 s, AGC: High)* BW: 1.3 lx {0.13 footcandle} (F2.0, Auto slow shutter: Off (1/30 s), AGC: High) 0.16 lx {0.016 footcandle} (F2.0, Auto slow shutter: max. 8/30 s, AGC: High)* * Converted value

Gain (AGC):	On(Low)/ On(Mid)/ On(High)/ Off
Adaptive black stretch:	On/Off
Light control mode setting:	Indoor scene (50 Hz/60 Hz)/ ELC
Maximum exposure time:	WV-SP105: 1/30 s, 3/100 s, 3/120 s, 2/100 s, 2/120 s, 1/100 s, 1/120 s, 1/250 s, 1/500 s, 1/1000 s, 1/2000 s, 1/4000 s, 1/10000 s WV-SP102: 1/30 s, 3/100 s, 3/120 s, 2/100 s, 2/120 s, 1/100 s, 1/120 s, 1/250 s, 1/500 s, 1/1000 s, 1/2000 s, 1/4000 s, 1/8000 s
Auto slow shutter:	WV-SP105: Off(1/30 s), max. 2/30 s, max. 3/30 s, max. 4/30 s, max. 6/30 s, max. 10/30 s, max. 16/30 s WV-SP102: Off(1/30 s), max. 2/30 s, max. 3/30 s, max. 4/30 s, max. 8/30 s
Simple black & white mode:	Off/AUTO
White balance:	ATW1/ ATW2/ AWC
Digital noise reduction:	High/Low
Privacy zone:	On/Off (up to 2 zones available)
Camera title on screen:	Up to 16 characters (alphanumeric characters, marks) On/Off
VMD alarm:	On/Off, 4 areas available

● Lens

Zoom ratio:	WV-SP105: 2x with Extra Zoom under VGA WV-SP102: -
Focal length:	WV-SP105: 3.54 mm WV-SP102: 2.00 mm
Maximum aperture ratio:	WV-SP105: 1:2.2 WV-SP102: 1:2.0
Focus range:	0.5 m - ∞
Angular field of view:	WV-SP105: Horizontal: 70.3 °, Vertical: 55.4 ° WV-SP102: Horizontal: 66.9 °, Vertical: 52.3 °

● Network

Network:	10BASE-T/ 100BASE-TX, RJ45 connector
Resolution:	WV-SP105: Aspect ratio: 4:3 H.264 1280×960/ VGA (640×480)/ QVGA (320×240), max. 30 fps JPEG 1280×960/ VGA (640×480)/ QVGA (320×240), max. 30 fps Aspect ratio: 16:9 H.264 1280×720/ 640×360/ 320×180, max. 30 fps JPEG 1280×720/ 640×360/ 320×180, max. 30 fps WV-SP102: Aspect ratio: 4:3 H.264 VGA (640×480)/QVGA (320×240), max. 30 fps JPEG VGA (640×480)/QVGA (320×240), max. 30 fps Aspect ratio: 16:9 H.264 640×360/ 320×180, max. 30 fps JPEG 640×360/ 320×180, max. 30 fps

Image compression method*1:	H.264 Image quality: Low(Motion priority)/ Normal/ Fine(Image quality priority) Transmission type: Unicast/Multicast Video bit rate: Constant bit rate: 64 kbps/ 128 kbps/ 256 kbps/ 384 kbps/ 512k bps/ 768 kbps/ 1024 kbps/ 1536 kbps/ 2048 kbps/ 3072 kbps/ 4096 kbps/ 8192 kbps*/ Unlimited *Only for WV-SP105, WV-SP105E Frame rate priority: 1 fps/ 3 fps/ 5 fps/ 7.5 fps/ 10 fps/ 12 fps*/ 15 fps/ 20 fps/ 30 fps * PAL models only JPEG Image quality: 0 SUPER FINE/ 1 FINE/ 2/ 3/ 4/ 5 NORMAL/ 6/ 7/ 8/ 9 LOW (10 steps: 0-9) Transmission type: PULL/PUSH
Transmission interval:	0.1 fps - 30 fps (JPEG frame rate will be restricted when displaying both JPEG and H.264 images.)
Bandwidth control:	Unlimited/ 64 kbps/ 128 kbps/ 256 kbps/ 384 kbps/ 512 kbps/ 768 kbps/ 1024 kbps/ 2048 kbps/ 4096 kbps/ 8192 kbps
Protocol:	IPv6: TCP/IP, UDP/IP, HTTP, RTP, FTP, SMTP, DNS, NTP, SNMP IPv4: TCP/IP, UDP/IP, HTTP, RTSP, RTP, RTP/RTCP, FTP, SMTP, DHCP, DNS, DDNS, NTP, SNMP
OS*2 *3:	Microsoft Windows 7 Professional (64-bit) Microsoft Windows 7 Professional (32-bit) Microsoft Windows Vista Business SP1 (32-bit) Microsoft Windows XP Professional SP3
Browser:	Windows Internet Explorer 8.0 (Microsoft Windows 7 Professional (32-bit/64-bit)) Windows Internet Explorer 7.0 (Microsoft Windows Vista Business SP1 (32-bit)) Microsoft Internet Explorer 6.0 SP3 (Microsoft Windows XP Professional SP3)
Maximum concurrent access number:	14 (Depends on network conditions)
FTP client:	Alarm image transmission, FTP periodic transmission
Multi-screen:	Up to 16 camera images can be displayed simultaneously on a multi-screen. (Including the camera itself)
Cellular phone compatibility:	JPEG image

*1 Transmission for 2 streams can be individually set in the same compression method.

*2 Refer to "Notes on Windows Vista® / Windows® 7" (PDF) for further information about system requirements for a PC and precautions when using Microsoft Windows 7 or Microsoft Windows Vista.

*3 When using IPv6 for communication, use Microsoft Windows 7 or Microsoft Windows Vista.

Standard accessories

Installation Guide (this document) .....1 pc.
Warranty card (NTSC model only) .....1 pc.
CD-ROM*1 .....1 pc.
Code label *2 .....1 pc.

The following parts are used during installation procedures.
Power cord plug .....1 pc.
Angle adjustment cover .....1 pc.
Safety wire.....1 pc.
Washer .....1 pc.
Spring washer .....1 pc.
Sticker (over the tripod screw) .....1 pc.

*1 The CD-ROM contains the operating instructions (PDFs) and different kinds of tool software programs.
*2 This label may be required for network management. The network administrator shall retain the code label.

Optional accessories

User License Accessory (For H.264) ..... BB-HCA8A (NTSC model)
BB-HCA8CE (PAL model, Korea)*
* Required in Korea.

Information for Users on Collection and Disposal of Old Equipment and used Batteries

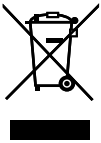

These symbols on the products, packaging, and/or accompanying documents mean that used electrical and electronic products and batteries should not be mixed with general household waste.
For proper treatment, recovery and recycling of old products and used batteries, please take them to applicable collection points, in accordance with your national legislation and the Directives 2002/96/EC and 2006/66/EC.
By disposing of these products and batteries correctly, you will help to save valuable resources and prevent any potential negative effects on human health and the environment which could otherwise arise from inappropriate waste handling.
For more information about collection and recycling of old products and batteries, please contact your local municipality, your waste disposal service or the point of sale where you purchased the items.
Penalties may be applicable for incorrect disposal of this waste, in accordance with national legislation.

For business users in the European Union
If you wish to discard electrical and electronic equipment, please contact your dealer or supplier for further information.

[Information on Disposal in other Countries outside the European Union]
These symbols are only valid in the European Union. If you wish to discard these items, please contact your local authorities or dealer and ask for the correct method of disposal.

Note for the battery symbol (bottom two symbol examples):
This symbol might be used in combination with a chemical symbol. In this case it complies with the requirement set by the Directive for the chemical involved.

For U.S. and Canada:

Panasonic System Communications Company of North America, Unit of Panasonic Corporation of North America
www.panasonic.com/business/
For customer support, call 1.800.528.6747
Three Panasonic Way, Secaucus,
New Jersey 07094 U.S.A.

Panasonic Canada Inc.
5770 Ambler Drive, Mississauga,
Ontario, L4W 2T3 Canada
(905)624-5010
www.panasonic.ca

For Europe and other countries:

Panasonic Corporation
http://panasonic.net

Importer's name and address to follow EU rules:

Panasonic Testing Centre
Panasonic Marketing Europe GmbH
Winsbergring 15, 22525 Hamburg F.R.Germany

© Panasonic System Networks Co., Ltd. 2012

Ns0810-3012 3TR006590DZA Printed in China