● *10mm T3.1 ED AS NCS CS (for Cinema)*

Instruction Manual

Thank you for purchasing the 10mm T3.1 ED AS NCS CS

We believe that you will have a special photographic experience with the 10mm T3.1 ED AS NCS CS lens.

The 10mm T3.1 ED AS NCS CS lens forms an optical system based on superior optical technologies, and maintains excellent resolution both at the center and around the periphery of the lens by incorporating a high performance Glass Molding ASP lens and UMC (Ultra Multi Coating).

Advantages of the 10mm T3.1 ED AS NCS CS lens

1. Image size of the digital APS-C (1:1.5x)
2. It compensates for aberrations by using a complex aspherical lens and, at the fully opened position, produces a high resolution and a high contrast at the center of the lens as well as around the periphery.
3. The detachable flower-shaped hood and UMC (Ultra Multi Coating) design suppresses flaring and ghost images.
4. High strength aluminum body with robust durability
5. Nano-coating system NCS (Nano Coating System) of the ultra-low reflection coating for the best picture quality.

The 10mm T3.1 ED AS NCS CS lens for video recording is designed with its own mount. You can mount the lens directly onto the camera without using an additional adaptor.

Please read this instruction manual carefully and use it accordingly.
※ Please read the Safety Precautions at the back of this instruction manual prior to use.

● Please read this instruction manual prior to use. ●

1. Component Names

【Figure】

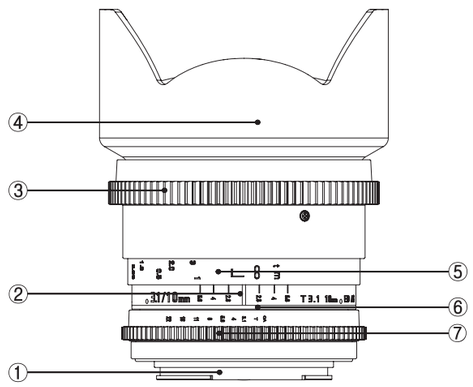

① Mount ④ Hood ⑦ Aperture adjustment gear
② Reference line ⑤ Distance scale
③ Focusing gear ⑥ Red ring

2. Attaching and Detaching

10mm T3.1 ED AS NCS CS lens mount is uniquely designed for Canon, Nikon (Fujifilm) F, Pentax (Samsung GX) K, Sony (Minolta) α, Canon M, Sony E, Fujifilm X, Samsung NX, Four Thirds, and Micro Four Thirds cameras.

【Attaching】

Gently hold the lens and align the camera mount attachment point with the attachment reference point or line on the lens. Push the lens into the camera and gently rotate the lens in the attachment direction until it makes a clicking sound.

【Detaching】

Gently hold the lens, press the lens release button on the camera, and turn the lens in the opposite direction of the attaching direction to detach the lens.

3. Focus Adjustment

When using the 10mm T3.1 ED AS NCS CS lens, you can set the focus of a subject by turning the focusing ring, since it is an MF (Manual Focus) adjustment lens.

【Nikon, Pentax Mount】

① To change the focus from a subject that is far away to a subject that is close, turn the focusing gear to the left (from ∞ to 0.24 m) and focus on the clearest subject by using the indication signal on the camera or by checking visually.

② To change the focus from a subject that is close to a subject that is far away, turn the focusing gear to the right (from 0.24 m to ∞) and focus on the clearest subject by using the indication signal on the camera or by checking visually.

【Canon / Canon M /Fujifilm X / Sony α / Sony E / FT / MFT / NX Mount】

① To change the focus from a subject that is far away to a subject that is close, turn the focusing gear to the right (from ∞ to 0.24 m) and focus on the clearest subject by using the indication signal on the camera or by checking visually.

② To change the focus from a subject that is close to a subject that is far away, turn the focusing gear to the left (from 0.24 m to ∞) and focus on the clearest subject by using the indication signal on the camera or by checking visually.

4. Brightness Control

You can set the desired brightness by turning the aperture adjustment gear when using the 10mm T3.1 ED AS NCS CS lens.

You can set the T stop from T3.1 to 22.
(The aperture is not positioned at any exact point, since it is adjustable continuously.)

5. Camera Settings

Some cameras require special settings when using this lens.

○ Canon Mount

1) Record a video in Av, Tv, P, CA, □ or M mode.
2) Please note that while recording a video the shutter speed is limited to a minimum of 1/30.

(The procedures above are for the 5D MARKII. The settings for the camera or the menu may vary based on the camera model or due to a functional upgrade. Refer to the camera manual or contact the camera manufacturer for detailed information.)

○ Nikon Mount

Please refer to the following and set the camera when necessary.

1) Record a video in M or A mode.
2) Adjust the exposure using the dial steps +5 to -5.

(The procedures above are for the D7000. The settings for the camera or the menu may vary based on the camera model or due to a functional upgrade. Refer to the camera manual or contact the camera manufacturer for detailed information.)

○ Pentax K Mount

1) Record a video in 🎥 mode.
2) Please note that while recording a video the shutter speed is limited to a minimum of 1/30.

(The procedures above are for the K-30. The settings for the camera or the menu may varybased on the camera model or due to a functional upgrade. Refer to the camera manual or contactthe camera manufacturer for detailed information.)

○ Sony α Mount

1) Record a video in A, S, P or M mode.

(The procedures above are for the A580. The settings for the camera or the menu may vary based on the camera model or due to a functional upgrade. Refer to the camera manual or contact the camera manufacturer for detailed information.)

○ Canon M Mount

1) Record a video in Av, Tv, P, CA or M mode.
2) Please note that while recording a video the shutter speed is limited to a minimum of 1/30.

(The procedures above are for the Canon M. The settings for the camera or the menu may vary based on the camera model or due to a functional upgrade. Refer to the camera manual or contact the camera manufacturer for detailed information.)

○ Fujifilm X Mount

1) Record a video in 🎥 mode.

(The procedures above are for the X-Pro1. The settings for the camera or the menu may vary based on the camera model or due to a functional upgrade. Refer to the camera manual or contact the camera manufacturer for detailed information.)

○ Sony E Mount

1) Record a video in A, S, P or M mode.
2) Adjust the exposure by rotating the dial at the back of the camera.

(The procedures above are for the NEX-5. The settings for the camera or the menu may vary based on the camera model or due to a functional upgrade. Refer to the camera manual or contact the camera manufacturer for detailed information.)

○ Samsung NX Mount

1) Record a video in A, M or 🎥 mode.
2) Please note that while recording a video the shutter speed is limited to a minimum of 1/30.

(The procedures above are for the NX-200. The settings for the camera or the menu may vary based on the camera model or due to a functional upgrade. Refer to the camera manual or contact the camera manufacturer for detailed information.)

○ Four Thirds FT Mount

1) Record a video in 🎥, P, A or M.
2) Please note that while recording a video the shutter speed is limited to a minimum of 1/30.

(The procedures above are for the E-5. The settings for the camera or the menu may vary based on the camera model or due to a functional upgrade. Refer to the camera manual or contact the camera manufacturer for detailed information.)

○ Micro Four Thirds Mount

1) Record a video in 🎥, P, A or M.
2) Please note that while recording a video the shutter speed is limited to a minimum of 1/30.

(The procedures above are for the E-5. The settings for the camera or the menu may vary based on the camera model or due to a functional upgrade. Refer to the camera manual or contact the camera manufacturer for detailed information.)

6. Specifications

Focal length		10 mm									
Aperture range		T3.1 - 22									
Image sensor size		APS-C									
Angle of view		APS-C (1:1.5x)							109.5° (diagonal)		
		APS-C (1:1.6x)							105.9° (diagonal)		
		Four Third (4/3") (1:2X)							93.4° (diagonal)		
Focusing range		∞ to 0.24 m									
Filter connection		Ø 87 mm									
Number of elements		14 elements (2 Aspherical lenses)									
Number of groups		9 groups									
Gear	Mount	Nikon	Canon	Pentax	Sony α	Canon M	Fujifilm X	Samsung NX	Sony E	Four-Thirds	Micro Four-Thirds
	Module	0.8									
	A	7 mm									
	B	4 mm									
	C	43.8 mm									
	D (mm)	8.0	10.5	9.0	10.0	36.4	36.8	29.0	36.5	15.8	35.5
	Focus Dia.	81.6 mm									
	Aperture Dia.	70.4	73.6								
Length (mm)		103.6	106.1	104.6	105.6	132	132.4	124.6	132.1	111.4	130.9
Weight (g)		590	600	590	595	630	635	625	630	620	630

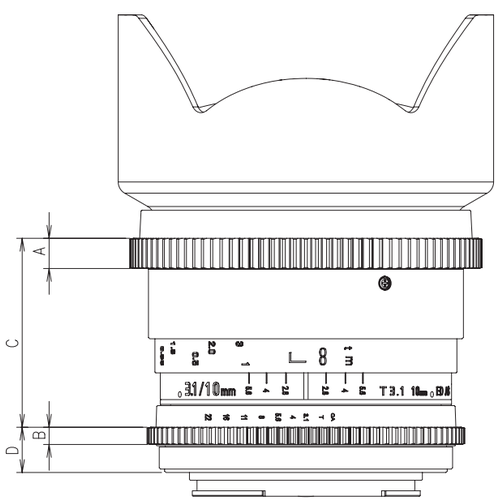

7. Troubleshooting

Issue	Causes	Corrective Action
A lens cannot be attached to the camera.	The attachment reference point on the lens is not aligned with the lens attachment reference point on the camera.	Align the attachment reference point on the lens with the lens attachment reference point on the camera.
A lens cannot be detached from the camera.	Incorrect rotation direction for detaching the lens. If you turn the lens while holding the camera, it may cause damage to the lens.	Press the lens release button on the camera, and gently turn the lens to the lens attaching/detaching reference points, in the direction as marked on the camera, and then pull the lens forward.
Blurry images	Incorrect focusing. Insufficient shutter speed or camera shake.	Turn the focusing gear while checking the indication or checking an object visually, set the focus until it becomes clear, and then press the shutter. Steady the camera and take a photograph at a shutter speed of 1/125 secs.
Automatic focusing does not work properly.	A manual focusing lens has trouble with automatic focusing.	Use the focusing gear to adjust the focus.
Dark or too bright pictures	Inappropriate exposure	Adjust the aperture adjustment gear accordingly.
The camera flash is not functioning.	The manual control lens may not be compatible, depending on the camera.	See the camera manual.
The camera finder indication or the display does not display.	This lens does not have an electric contact signal, so there is no communication with the camera through electric signals.	No problem with shooting
Zooming failure	This lens is a single lens.	
This lens cannot be mounted on other cameras.	This lens is designed for its own mount.	Purchase the designated lens mount.
You want to attach our 2X or 1.4X converter lens.	Our converter is designed for the T (M42 screw) mount only. Therefore it cannot be used with this lens.	Use each company's own mount converter. However, be aware that auto focusing is unavailable.

8. Safety Precautions

The following precautions are divided into two types according to the level of danger.

⚠WARNING	⚠CAUTION
If this instruction is not followed, it may cause death or severe injury to the user.	If this instruction is not followed, it may cause death or severe injury to the user.

The following pictograms are used in the below precautions:

- Requires caution. Inside the pictogram it shows contents of precautions. (It shows outbreak of fire in the pictogram on the left.)
- Shows prohibition. Inside the pictogram it shows contents of prohibition. (It shows prohibition of dismantling in the pictogram on the left.)
- Shows instruction. Inside the pictogram it shows contents of instructions. (It shows instruction of precaution in the pictogram on the left.)

⚠WARNING

Don't look at the sun through the lens. It may cause blindness.

⚠CAUTION

Attach the lens to the camera correctly and ensure the lens is held in place properly; otherwise the lens may not be removable, or may become loose and cause an accident.

Don't put excessive pressure on the lens attached to the camera; otherwise it may cause damage to the lens or to the camera mount. Be sure to hold the lens when operating or moving.

Ensure that the camera operates properly by checking the lens beforehand or by test shooting for important events such as a wedding ceremony and an overseas trip.

Don't leave the lens within reach of babies, as it may cause injury to the baby if the lens falls or is dropped.

Don't attempt to modify or alter the lens. It may lead to failure of the camera. Modified or altered lenses may not be repaired.

Don't leave the lens in direct sunlight. It may cause a fire, depending on lenses that concentrate light on a close object.

Don't look at the sun directly through a camera with a lens attached. It may cause damage to one's eyesight.

WARNING!

Do not wet this product or expose it to a moist environment. It may cause a fire or electric shock.

CAUTION!

- Do not use this product or store it close to devices that generate heat i.e., heaters, thermal regulators, stoves or stereo amplifiers.
- Do not leave the lens in conditions where drastic temperature changes can occur.
- Do not touch the surface of the lens by hand, and avoid making contact with sharp objects.
- Avoid dropping the lens.
- Do not soak the lens in water, and avoid water splashing onto the lens.
- If there are foreign bodies on the lens, use a lens cleaning kit only.
- If the lens hood is cut by the user, it may cause damage to the surface of the lens, as the surface of the lens may make contact with the floor.

MEMO